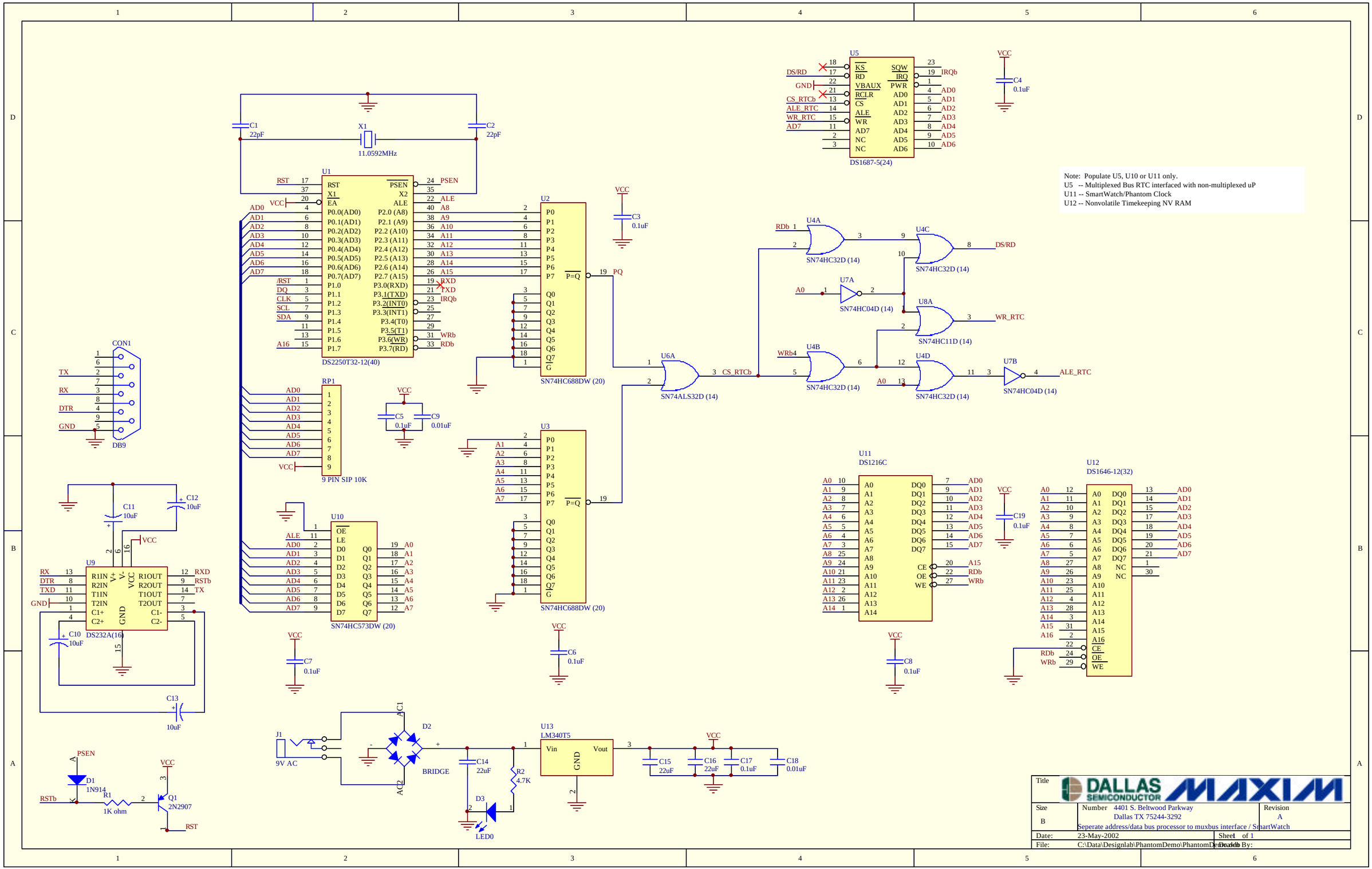
U5
DS1687-5(24)
U1
DS2250T32-12(40)
U2
SN74HC688DW (20)
U3
SN74HC688DW (20)
U10
SN74HC573DW (20)
U9
DS232A(16)
RP1
9 PIN SIP 10K
CON1
DB9
X1
11.0592MHz
C1
22pF
C2
22pF
C3
0.1uF
C4
0.1uF
C5
0.1uF
C6
0.1uF
C7
0.1uF
C8
0.1uF
C9
0.01uF
C10
10uF
C11
10uF
C12
10uF
C13
10uF
C19
0.1uF
U4A
SN74HC32D (14)
U4B
SN74HC32D (14)
U4C
SN74HC32D (14)
U4D
SN74HC32D (14)
U6A
SN74ALS32D (14)
U7A
SN74HC04D (14)
U7B
SN74HC04D (14)
U8A
SN74HC11D (14)
U11
DS1216C
U12
DS1646-12(32)
Note: Populate U5, U10 or U11 only.
U5 -- Multiplexed Bus RTC interfaced with non-multiplexed uP
U11 -- SmartWatch/Phantom Clock
U12 -- Nonvolatile Timekeeping NV RAM
J1
9V AC
D2
BRIDGE
C14
22uF
R2
4.7K
D3
LED0
U13
LM340T5
C15
22uF
C16
22uF
C17
0.1uF
C18
0.01uF
D1
1N914
R1
1K ohm
Q1
2N2907
PSEN
RSTb
RST
Title
DALLAS SEMICONDUCTOR
MAXIM
Size
B
Number
4401 S. Beltwood Parkway
Dallas TX 75244-3292
Revision
A
Seperate address/data bus processor to muxbus interface / SmartWatch
Date: 23-May-2002
Sheet of 1
File: C:\Data\Designlab\PhantomDemo\PhantomDemo.db
Drawn By: