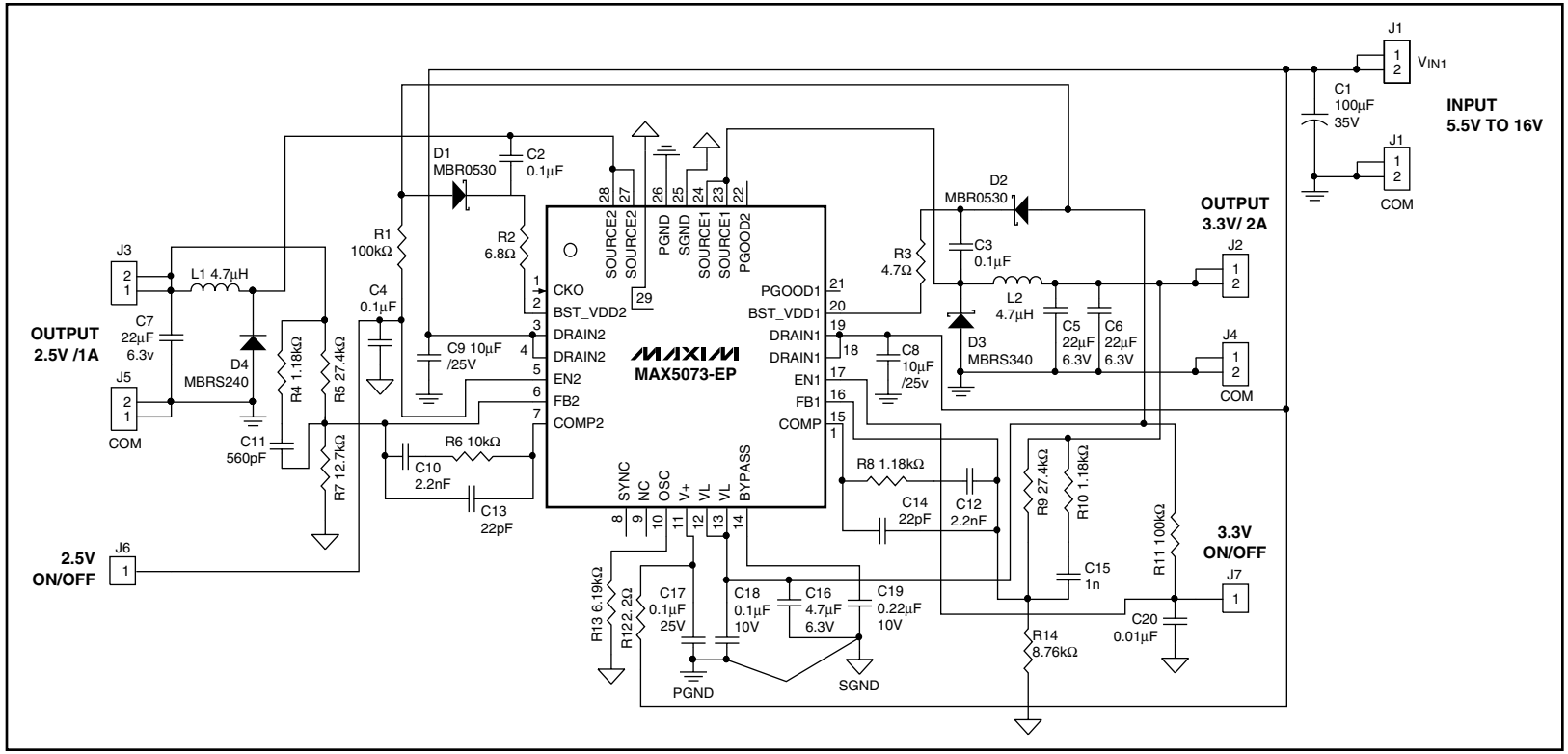
MAX5073-EP
INPUT
5.5V TO 16V
OUTPUT
3.3V/ 2A
OUTPUT
2.5V /1A
2.5V
ON/OFF
3.3V
ON/OFF
VIN1
COM
PGND
SGND
CKO
BST_VDD2
DRAIN2
DRAIN2
EN2
FB2
COMP2
SOURCE2
SOURCE2
PGND
SGND
SOURCE1
SOURCE1
PGOOD2
PGOOD1
BST_VDD1
DRAIN1
DRAIN1
EN1
FB1
COMP
SYNC
NC
OSC
V+
VL
VL
BYPASS
J1
J2
J3
J4
J5
J6
J7
C1 100µF 35V
C2 0.1µF
C3 0.1µF
C4 0.1µF
C5 22µF 6.3V
C6 22µF 6.3V
C7 22µF 6.3v
C8 10µF /25v
C9 10µF /25V
C10 2.2nF
C11 560pF
C12 2.2nF
C13 22pF
C14 22pF
C15 1n
C16 4.7µF 6.3V
C17 0.1µF 25V
C18 0.1µF 10V
C19 0.22µF 10V
C20 0.01µF
R1 100kΩ
R2 6.8Ω
R3 4.7Ω
R4 1.18kΩ
R5 27.4kΩ
R6 10kΩ
R7 12.7kΩ
R8 1.18kΩ
R9 27.4kΩ
R10 1.18kΩ
R11 100kΩ
R13 6.19kΩ
R122.2Ω
R14 8.76kΩ
L1 4.7µH
L2 4.7µH
D1 MBR0530
D2 MBR0530
D3 MBRS340
D4 MBRS240